SOLUTIONS ASSIGNMENT 1
ELET 2230

A 0.4
C 0.3
B 0.16
D 0.10
E 0.04

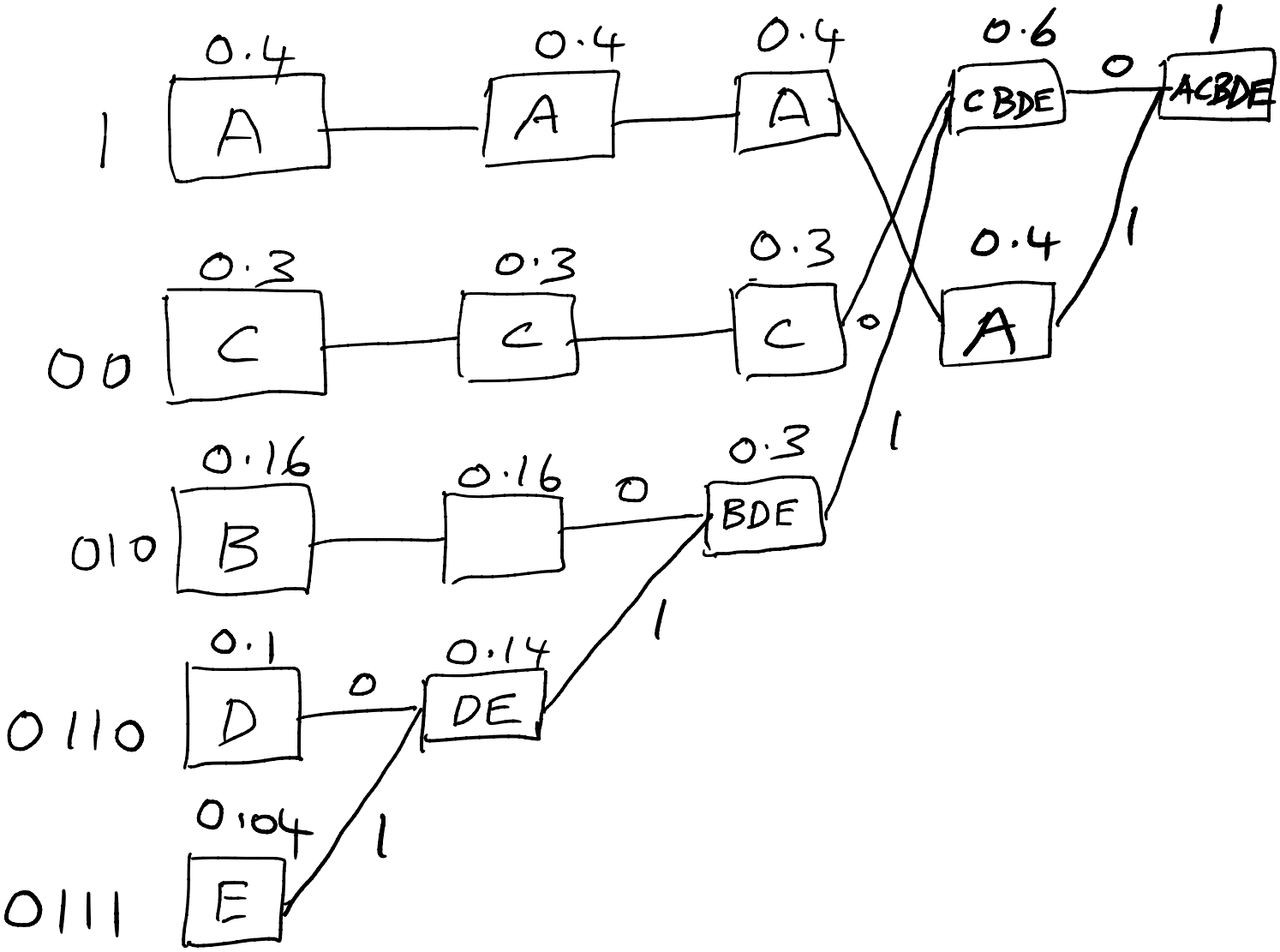

$I_A = 1.32$ $\quad H(x) = 1.99$

$I_B = 2.64$ $\quad \bar{L} = 2.04$

$I_C = 1.74$

$I_D = 3.32$ $\quad$ EFFICIENCY $= 97.5\%$

$I_E = 4.64$ $\quad$ INFORMATION RATE $= 348.25$ bits/sec

	# OF ZEROES
A	0
B	2
C	2
D	2
E	1

LET

$N_A \rightarrow$ NUMBER OF A'S

$N_B \rightarrow$ NUMBER OF B'S

$\vdots$

OF ZEROES IS

$2N_B + 2N_C + 2N_D + N_E$

OF BINARY DIGITS

$N_A + 2N_B + 3N_C + 4N_D + 4N_E$

$$P_A = \frac{N_A}{N} = 0.4$$

$N_A = 0.4N$

$N_B = 0.16N$

$N_C = 0.3N$

$N_D = 0.1N$

$N_E = 0.04N$

PROBABILITY OF A ZERO

$$\frac{2(0.16) + 2(0.3) + 2(0.1) + 0.04}{0.4 + 2(0.16) + 3(0.3) + 4(0.1) + 4(0.04)}$$

$= 0.53$

2. LEMPEL-ZIV

100 101 001 011 101 001

0, 1

0, 1, 10 — 01011001110100 1

0, 1, 10, 01 — 011 001110100 1

0, 1, 10, 01, 011 — 001110100 1

0, 1, 10, 01, 011, 00 — 11101001

0, 1, 10, 01, 011, 00, 11 — 101001

0, 1, 10, 01, 011, 00, 11, 101 — 001

0, 1, 10, 01, 011, 00, 11, 101, 001

1	2	3	4	5	6	7	8	9
0	1	10	01	011	00	11	101	001
		↓	↓	↓	↓	↓	↓	↓
		2	1	4	1	2	3	6

CODE 0100 0011 1001 0010 0101 0111 1101

LEMPEL-ZIV DECODE

CODE 0100 0011 1001 0010 0101 0111 1101

1	2	3	4	5	6	7	8	9
0	1	10	01	011	00	11	101	001

2	1	4	1	2	3	6
↑	↑	↑	↑	↑	↑	↑
0100	0011	1001	0010	0101	0111	1101

CODE 0100 0011 1001 0010 0101 0111 1101

ORIGINAL

100 101 001 101 001

3.

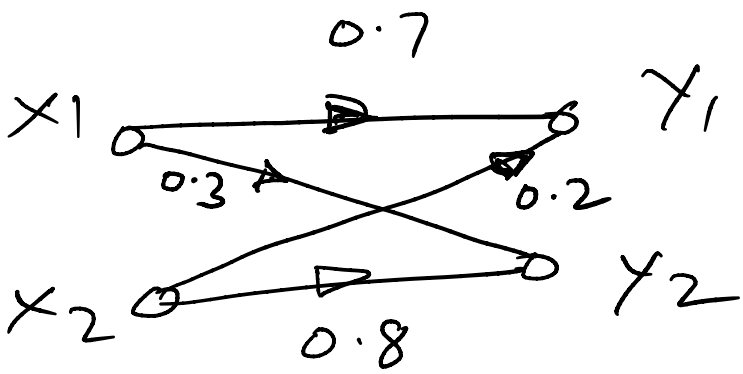

$$I(X,Y) = H(Y) - H(Y|X)$$

$$I(X,Y) = \sum_j P(y_j) \log_2 \frac{1}{P(y_j)} - \sum_j P(y_j|x_i) P(x_i) \log_2 \frac{1}{P(y_j|x_i)}$$

$$P(y_1) = P(y_1|x_1) P(x_1) + P(y_1|x_2) P(x_2)$$
$$= (0.7)(0.5) + (0.2)(0.5)$$
$$= 0.45$$

$$P(y_2) = 0.55$$

$$H(Y) = \sum_{j=1}^{2} P(y_j) \log_2 \frac{1}{P(y_j)}$$
$$= P(y_1) \log_2 \frac{1}{P(y_1)} + P(y_2) \log_2 \frac{1}{P(y_2)}$$
$$= (0.45)(1.15) + (0.55)(0.86)$$
$$= 0.99$$

$$H(Y|X) = \sum_{i,j}^{2} P(y_j|x_i)\,P(x_i)\,\log_2 \frac{1}{P(y_j|x_i)}$$

$$= P(x_1)\left\{P(y_1|x_1)\log_2\frac{1}{P(y_1|x_1)} + P(y_2|x_1)\log_2\frac{1}{P(y_2|x_1)}\right\}$$

$$+\ P(x_2)\left\{P(y_1|x_2)\log_2\frac{1}{P(y_1|x_2)} + P(y_2|x_2)\log_2\frac{1}{P(y_2|x_2)}\right\}$$

$$= 0.5\left\{0.7(0.51) + 0.3(1.74)\right\} + 0.5\left\{0.2(2.32) + 0.8(0.32)\right\}$$

$$= 0.8$$

AVERAGE MUTUAL INFORMATION

$$I(X,Y) = H(Y) - H(Y|X)$$

$$= 0.99 - 0.8 = 0.19$$